SILVERLINE

by GIULIANO AUTOMOTIVE EQUIPMENT

www.giuliano-automotive.com

The best choice for the average tyre shop with budget goal.

SL22 PRO

Mid Volume

400V-3ph 2V

YouTube Watch the video

Discover on our website!

AUTOMATIC TILT BACK TYRE CHANGER WITH DUAL ASSIST ARM FOR CAR WHEELS 10” – 24”

Suitable for Tubeless tyre bead seating system (optional)

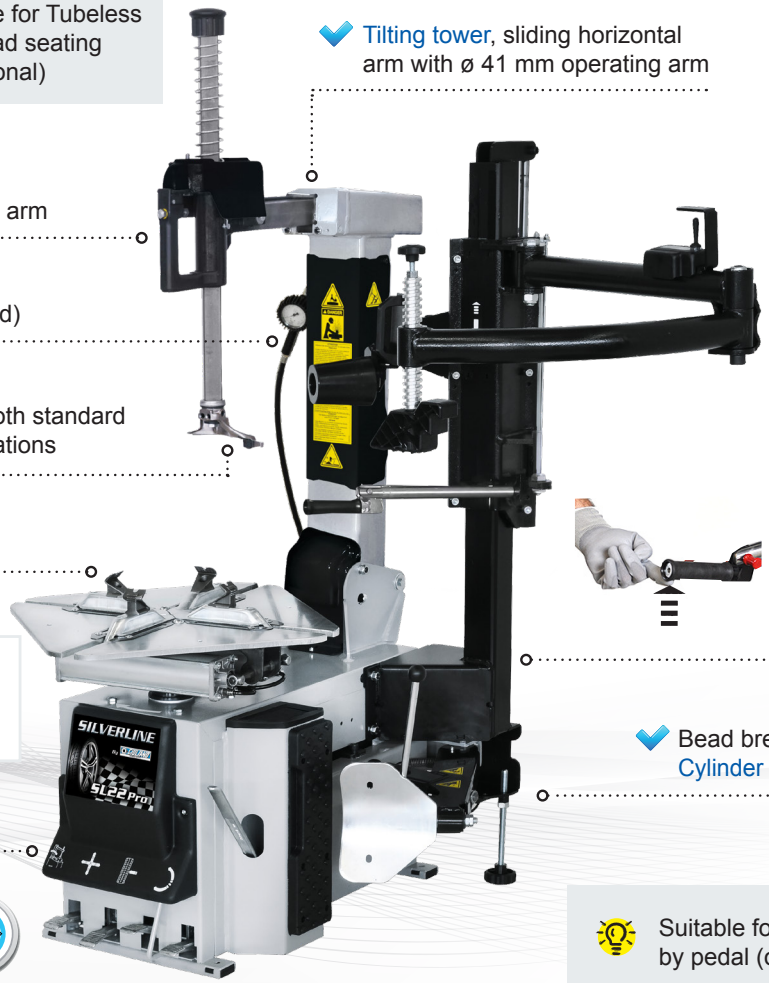

- Tilting tower, sliding horizontal arm with ø 41 mm operating arm
- Spring supported operating arm
- CE inflating gauge (standard)
- Fitting head designed for both standard and low profiled tyre applications
- Tabletop thickness 12 mm
- Efficiency and Speed with double rotation speed (3ph Version)
- Reinforced Chassis

1010 mm | 390 mm | 10” - 22” | 12” - 24”

NEW

HP4 Additional auxiliary helper system provides a valuable support in mounting/demounting Run Flat, UHP and low profiled tyres.

HP4 Dual Assist Arm with 3 tools (standard):

- Bead Pressing Roller
- Bead Lifting Roller
- Bead Pressing Pad

Additional tilting roller tool for lower bead with an anti-collision joint.

- Bead breaker double effect Cylinder ø 200 mm., made in aluminum

Suitable for Tyre inflation by pedal (optional)

STANDARD FEATURES

Rim clamping from outside	10” - 22” *
Rim clamping from inside	12” - 24” *
Max. tyre diameter	1010 mm (39”)
Max. tyre width	390 mm (15”)
Bead breaker cylinder force at 10 Bar	30800 N
Operating pressure	10 bar (145 Psi)
Power supply	400V-3ph-2 speed 220V-1ph
Motor power	0,75/1,125 KW (400V-3Ph-2V) 0,90 KW (230V-1Ph)
Rotation speed	7 - 14 rpm
Pre-set tyre inflating pressure	3,5 bar (50 Psi)
Net weight	300 kg
Max. overall dimensions	1420x1740x2010 mm

** By adjustable jaws*

STANDARD ACCESSORIES

- Bead lifting lever
- Plastic protectors for mounting/demounting tool
- Lubricator + Pressure regulator
- CE inflating gauge

GROUP GIULIANO

Giuliano Industrial S.p.A: Via Guerrieri, 6 - 42015 CORREGGIO (RE) ITALY
Tel. +39 0522 731111 - Telefax +39 0522 633109 - E-mail: info@giuliano-automotive.com -
Internet: www.giuliano-automotive.com

SILVERLINE By GIULIANO